FireRock

The fireplace, *rekindled.*

OUTDOOR RUMFORD FIREPLACE SYSTEM

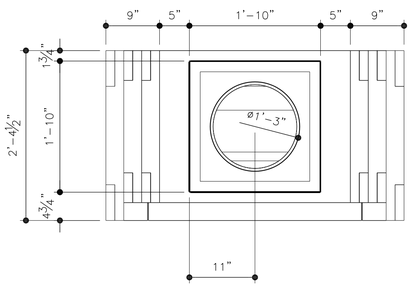

CHIMNEY PLAN

SCALE: 1" = 1'-0"

FIREPLACE SIZE	DIM A	DIM B	DAMPER SIZE
30	38"	32.1/2"	24"
36	44"	38.1/2"	30"
42	50"	44.1/2"	36"
48	56"	50.1/2"	42"

42" SIZE SHOWN TO SCALE – THIS DRAWING

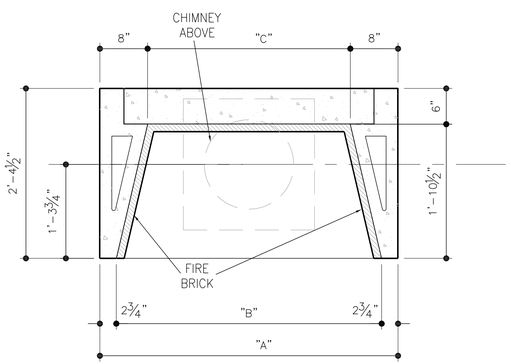

FIREBOX PLAN

SCALE: 1" = 1'-0"

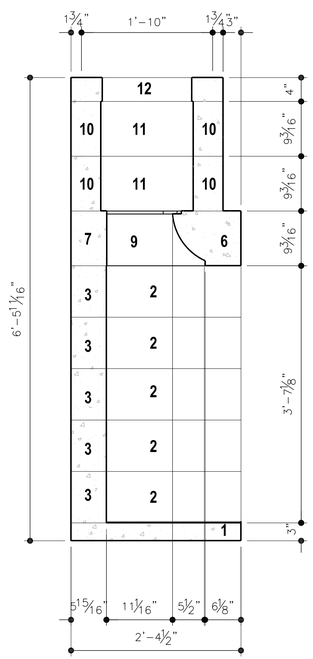

SECTION A-A

SCALE: 1" = 1'-0"

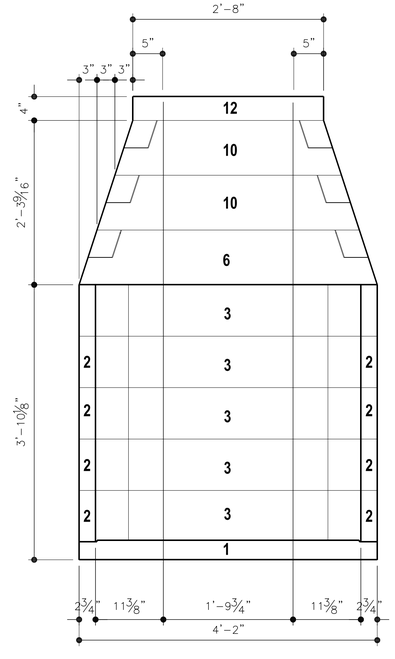

FRONT ELEVATION

SCALE: 1" = 1'-0"

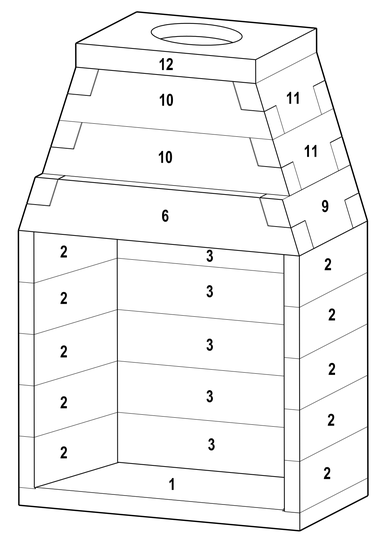

ISOMETRIC

SCALE: 1" = 1'-0"

#	COMPONENT NAME
1	BASE PLATE
2	FIREBOX SIDE
3	FIREBOX BACK- STRAIGHT BACK BLOCK
6	RADIUS THROAT FRONT
7	SQUARE THROAT BACK
8	THROAT LEFT SIDE
9	THROAT RIGHT SIDE
10	SMOKE CHAMBER FRONT AND BACK
11	UNIVERSAL SMOKE CHAMBER SIDES
12	CHIMNEY BASE
13	CHIMNEY BLOCK
17	CHIMNEY CAP (OPTIONAL)

1.) ALL DIMENSIONS SHOWN THIS SHEET ARE SPECIFIC TO THE 42" UNIT.

RELEASE DATE 04/02/09

SCALE 1" = 1'-0"

SHEET

ODRM